HAYWARD

AutoSkim™ Skimmer - Hayward®

YEARS OF WARRANTY
3 STANDARD

SP1084

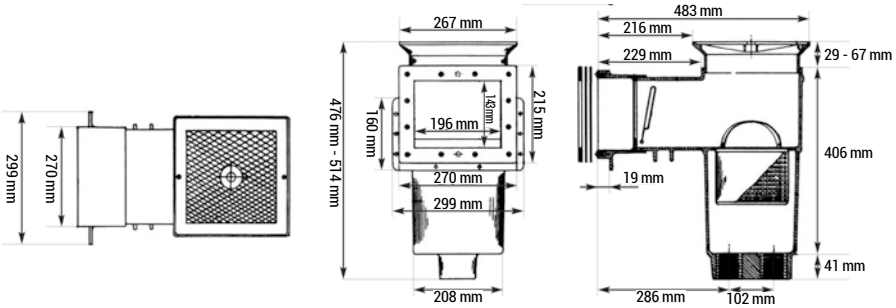

SP1085

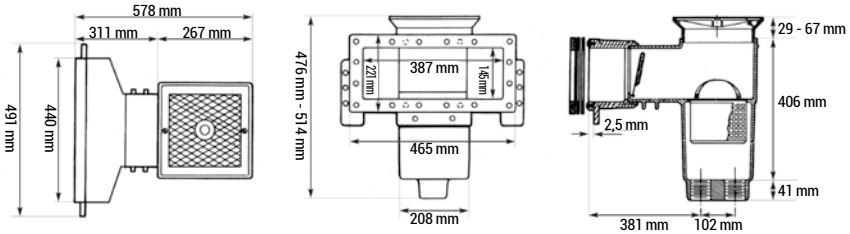

AUTOSKIM™ SKIMMER HAYWARD®

Description	Feed through size	Concrete Item	Vinyl Item
Small Track Skimmer	229 / 229 mm	-	SP1084
Wide Track Skimmer	325 / 253 / 325 mm	-	SP1085
Pack of long screws (32 mm)	-	-	SPX1085Z1AM